WARNING — RISK OF ELECTRIC SHOCK

Disconnect power at the circuit breaker and verify the circuit is de-energized before installing or servicing this luminaire. Lock out and tag the circuit.

Installation must be performed by a qualified electrician in accordance with the National Electrical Code (NEC), NFPA 70, and all applicable state and local codes.

Before installation, consult your local ordinances and building codes for compliance. LAMAR LED assumes no responsibility for misapplication of fixtures.

Do not install a damaged luminaire. Do not modify the housing, driver, LED board, or factory wiring — doing so voids the UL certification and the warranty.

1. Before You Begin

Confirm the following before opening the ceiling or pulling wire. The catalog number on the fixture label is the authority for what was supplied.

- Match the catalog number. Compare the label on the housing to the approved submittal — series, size, power, lens, CCT and options.
- Verify supply voltage. The standard driver is universal input 120–277V. Confirm branch-circuit voltage falls within this range.
- Inspect the shipment. Check the housing, lens, and trims for shipping damage. Report freight damage before installing.
- Confirm the mounting method matches the structure (see table below). Verify the fixture as supplied is configured for the mounting condition on site.
- Tools required. Power driver with the appropriate bit, wire strippers, listed wire connectors, tape measure, level, and an appropriate ladder or lift.

Mounting method	Typical application
Surface Mounted to Ceiling	Direct ceiling mount on a finished or structural surface
Wall Mounted	Direct wall mount

Each method is detailed in Section 5. Confirm which configuration was supplied before starting — mounting styles are not interchangeable in the field.

Mounting options as published: Surface mount on walls or ceilings. Actual overall lengths: 2′ (nominal) nominal = 26.000 in, 4′ (nominal) nominal = 48.900 in. Available in 2′ or 4′ lengths (nominal).

2. Prepare the Location

1. Lay out fixture locations from the reflected ceiling plan. Snap lines and confirm the run is square and level before cutting or drilling.
2. On surface-mounted runs, locate framing or install blocking so every fixture lands on structure. Mark mounting holes from the fixture itself rather than from the drawing.
3. Route branch-circuit conductors to each fixture location, leaving 6–8 in. of free conductor. Support the whip or conduit independently of the luminaire.

3. Electrical Connection

1. Confirm power is off and locked out.
2. Open the fixture for access per its construction and retain all fasteners.
3. Select the entry closest to the incoming feed. Ample knockouts are provided for convenient mounting; dimension drawing shows .875 in. KO (3X on 2′, 4X on 4′).
4. Install a listed connector or fitting in the knockout and bring conductors into the wireway. Protect conductors from the knockout edge.
5. Connect line, neutral, and ground to the corresponding fixture leads using listed wire connectors. Bond the equipment ground to the housing ground screw.
6. Dress all conductors neatly inside the housing so nothing is pinched when the cover is reinstalled.

4. Wiring Diagrams

A. Emergency pack connection (options EM)

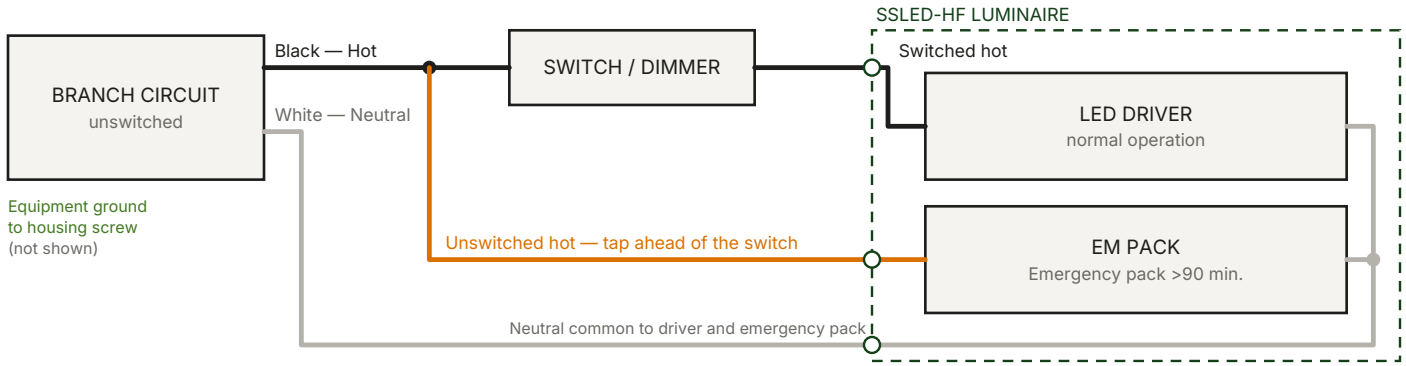

Schematic; field connections only. Circles mark housing knockouts, each of which needs a listed connector or fitting.

Wire color reference

Conductor	Color	Notes
Line / hot	Black	Branch circuit, 120–277V. Switched hot where a switch or dimmer is used.
Neutral	White	Grounded conductor. Reserved color — never use for control conductors.
Equipment ground	Green or green/yellow	Bond to the housing ground screw. Reserved color — never use for control conductors.
Unswitched hot (EM)	Per project drawings	Tap ahead of the switch and dimmer so the pack senses loss of normal power.

5. Mounting

Draft-prone areas: when used in draft-prone areas, fixtures with high frequency sensors should be rigidly mounted. This applies to both mounting methods below.

5A. Surface Mounted to Ceiling

1. Mark the fixture position and the mounting-hole locations from the reflected ceiling plan.
2. Locate structural framing, or install blocking or an approved anchor suited to the ceiling construction. The fixture must be supported by structure, not by the ceiling finish alone.
3. Bring the branch circuit into the housing through the knockout nearest the feed, using a listed connector or fitting.
4. Fasten the housing tight to the ceiling with fasteners appropriate to the substrate, then confirm it is level and does not rock.

5B. Wall Mounted

1. Establish the mounting height and a level line for the run. In continuous runs, strike one line across the full length so fixtures align end to end.
2. Locate studs or install blocking or an approved anchor suited to the wall construction. The fixture must be supported by structure, not by the wall finish alone.
3. Bring the branch circuit into the housing through the knockout nearest the feed, using a listed connector or fitting.
4. Fasten the housing to the wall, then confirm it is level and tight with no gap at the wall surface.
5. Where the fixture is mounted within reach, confirm the location does not conflict with doors, equipment, or traffic.

6. Lens and Covers

1. Reinstall the wireway cover or access plate with the original fasteners. Confirm no conductor is pinched and the cover is fully seated.
2. Install or reseat the lens or diffuser as supplied. Handle acrylic and polycarbonate by the edges; do not force, flex sharply, or over-tighten against the lens.
3. Remove any protective film and clean fingerprints before closing out the ceiling.

7. Controls and Optional Equipment

Option	Installation requirement
EM — emergency pack	Emergency pack >90 min., >500 lumens (higher output & run time available - consult factory). Connect the pack to an unswitched line-voltage source ahead of any switch or dimmer so it senses loss of normal power — see Diagram A (Section 4). Allow a full 24-hour charge before testing.
Option	Installation requirement
HF — sensor	High Frequency motion sensor, internally mounted (on/off); built in daylight sensor; choice of 30%, 20%, 10% or 5% bi-level or on/off. Factory-set standby level. Confirm the setting matches the project requirements and walk-test the fixture before close-out. Change settings only by the method described in the sensor documentation supplied with the fixture.
30HF — sensor	Bi-level 30% standby. Factory-set standby level. Confirm the setting matches the project requirements and walk-test the fixture before close-out. Change settings only by the method described in the sensor documentation supplied with the fixture.
20HF — sensor	Bi-level 20% standby. Factory-set standby level. Confirm the setting matches the project requirements and walk-test the fixture before close-out. Change settings only by the method described in the sensor documentation supplied with the fixture.
10HF — sensor	Bi-level 10% standby. Factory-set standby level. Confirm the setting matches the project requirements and walk-test the fixture before close-out. Change settings only by the method described in the sensor documentation supplied with the fixture.
05HF — sensor	Bi-level 5% standby. Factory-set standby level. Confirm the setting matches the project requirements and walk-test the fixture before close-out. Change settings only by the method described in the sensor documentation supplied with the fixture.
FOHF — sensor	On/Off. Factory-set standby level. Confirm the setting matches the project requirements and walk-test the fixture before close-out. Change settings only by the method described in the sensor documentation supplied with the fixture.
HRC — sensor	Sensor remote control. Handheld accessory. Program the sensor from the floor after the fixture is energized; confirm the setting takes effect before leaving the area.

Sensor setting	Factory default — confirm against the dimming option on the label
Operation	Bi-level, 100% / 10%
Tri-level (corridor) dimming	10% bi-level; Off function disabled
Daylight monitoring	Disabled

Sensor defaults as published on specification sheet Rev 0926. Detection area, hold-time, daylight threshold, stand-by period and stand-by dimming level are adjustable with the HRC sensor remote control.

Universal voltage 120-277V standard. Custom driver tuning available for specific lumen requirements. Tuned fixtures are factory-set and must not be adjusted in the field. Contact the factory for options not shown.

8. Start-Up Check and Maintenance

- Restore power and confirm the fixture energizes at full output.
- Allow a full 24-hour charge, then test emergency units by interrupting normal power and confirming transfer to the emergency pack for the rated duration.
- Verify sensor coverage and walk-test each sensor. Confirm time delay and sensitivity settings match the project requirements, and that nothing obstructs the sensor.
- Sight the finished run for level, alignment, and consistent lens appearance; confirm color temperature is uniform across all fixtures.
- No routine relamping is required — the LED board and driver are the serviceable components. Disconnect power before any service.
- Clean the lens with a soft cloth and mild soapy water only. Do not use ammonia, solvents, or abrasive cleaners on acrylic or polycarbonate.
- Warranty: 5 years - part replacement only (see our terms & conditions page at www.lamarled.com for details). Listings and ratings as published: All electrical components are U.L. listed or recognized, All fixtures are U.L. Certified and Union made in the USA.

QUESTIONS OR APPLICATIONS NOT COVERED HERE

Contact LAMAR LED at 631.777.7700 or visit www.lamarled.com. Due to the rapid advancements in LED technology, please consult our website for the most current technical data.